DRG No
USED ON

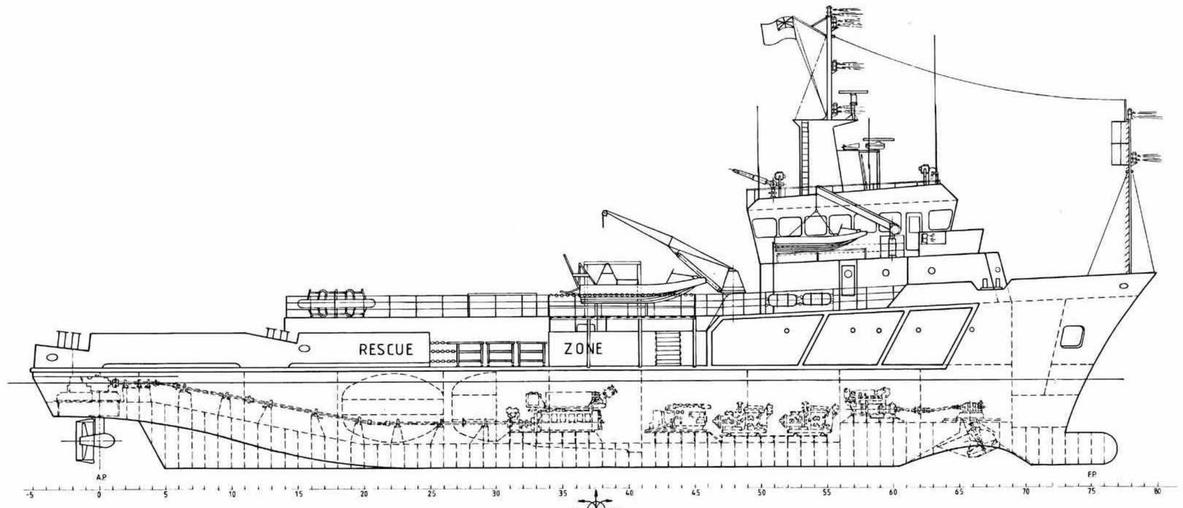

PROFILE

FRAME SPACING 610 MM THROUGHOUT

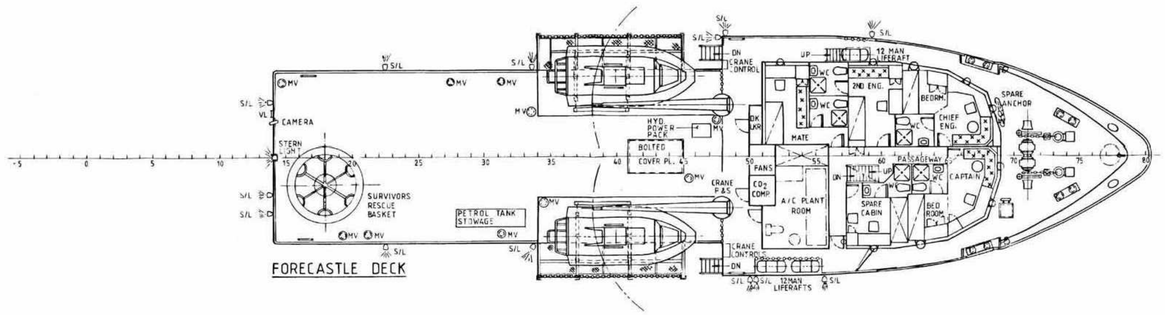

FORECASTLE DECK

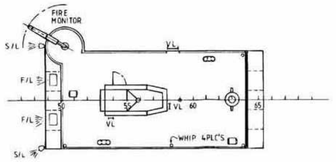

WHEELHOUSE TOP

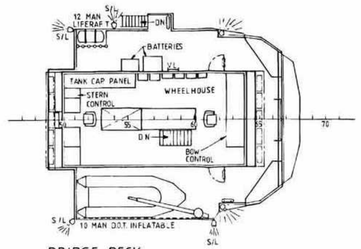

BRIDGE DECK

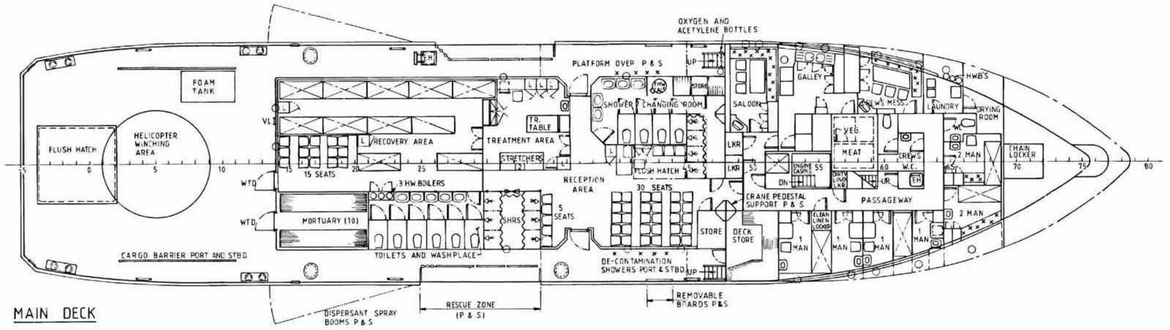

MAIN DECK

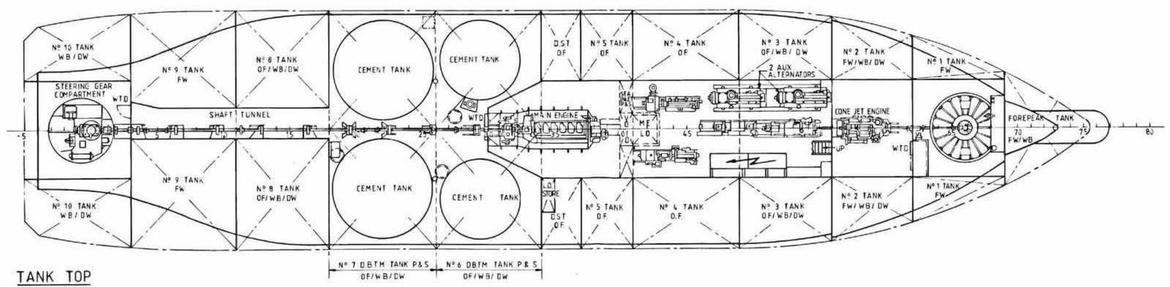

TANK TOP

MAIN DIMENSIONS

LENGTH O.A.	52·11 M
LENGTH B.P.	45·75 M
BREADTH MLD.	11·00 M
DEPTH MLD.	4·70 M

M.C.M. (MARINE DESIGN)
15 MAY 1992

ISSUE	AMENDMENTS

M.C.M. (MARINE DESIGN)
15 BEACH ROAD SOUTH SHIELDS NE33 2QA 091-4542004

SHIP TITLE: M.V. 'GRAMPIAN HAVEN'

GENERAL ARRANGEMENT.

CLASSIFICATION AUTHORITY		REGULATORY AUTHORITY		OWNERS		DRAWN	TRACED	CHECKED	ISSUED
SUBMITTED	APPROVED	SUBMITTED	APPROVED	SUBMITTED	APPROVED				

CUSTOMER: NORTH STAR SHIPPING LTD | SCALE: 1:100 | DRG. No: MCM 1579

REF No E1-6-52